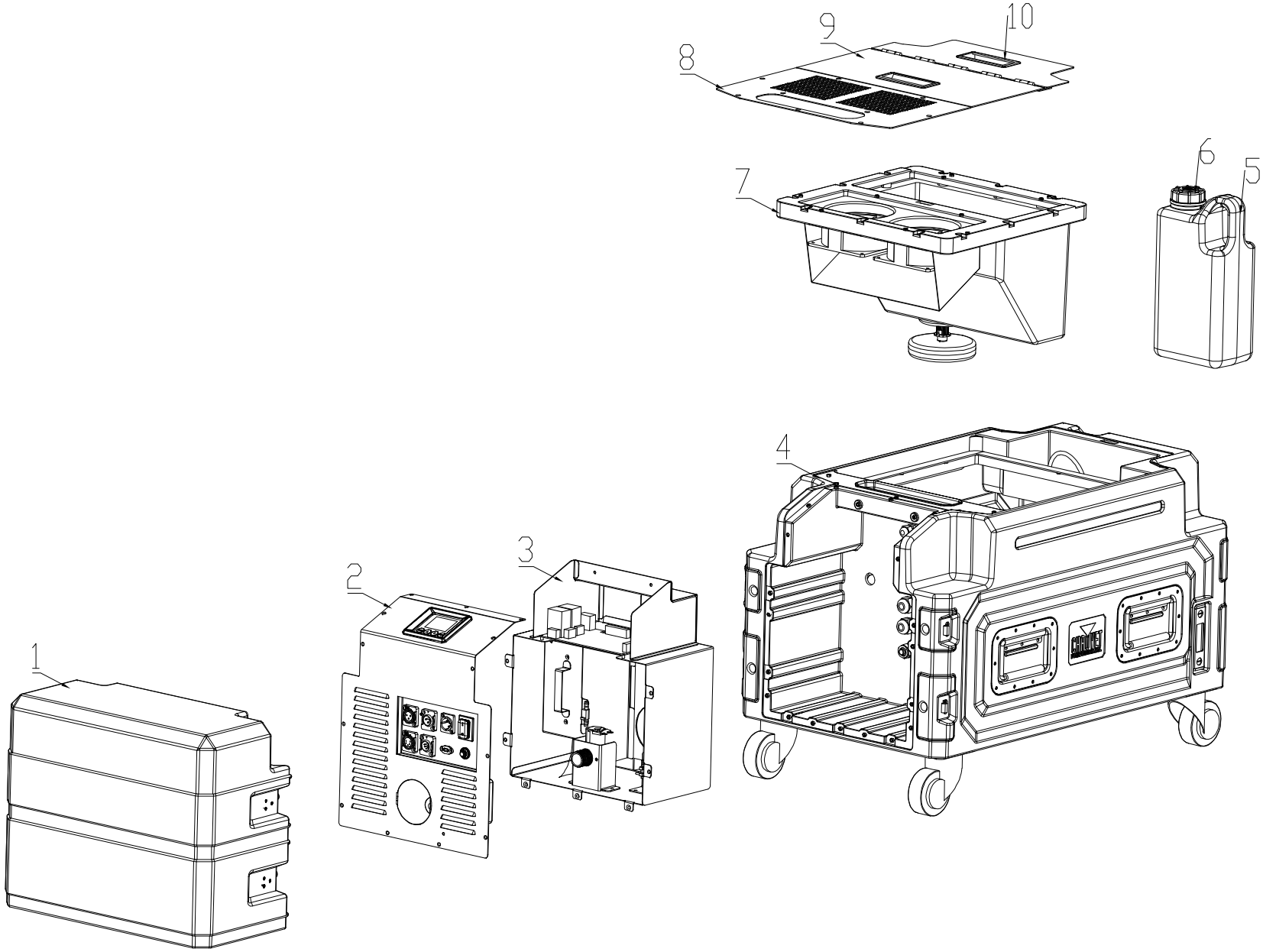
1
2
3
4
5
6
7
8
9
10
CHAUVET

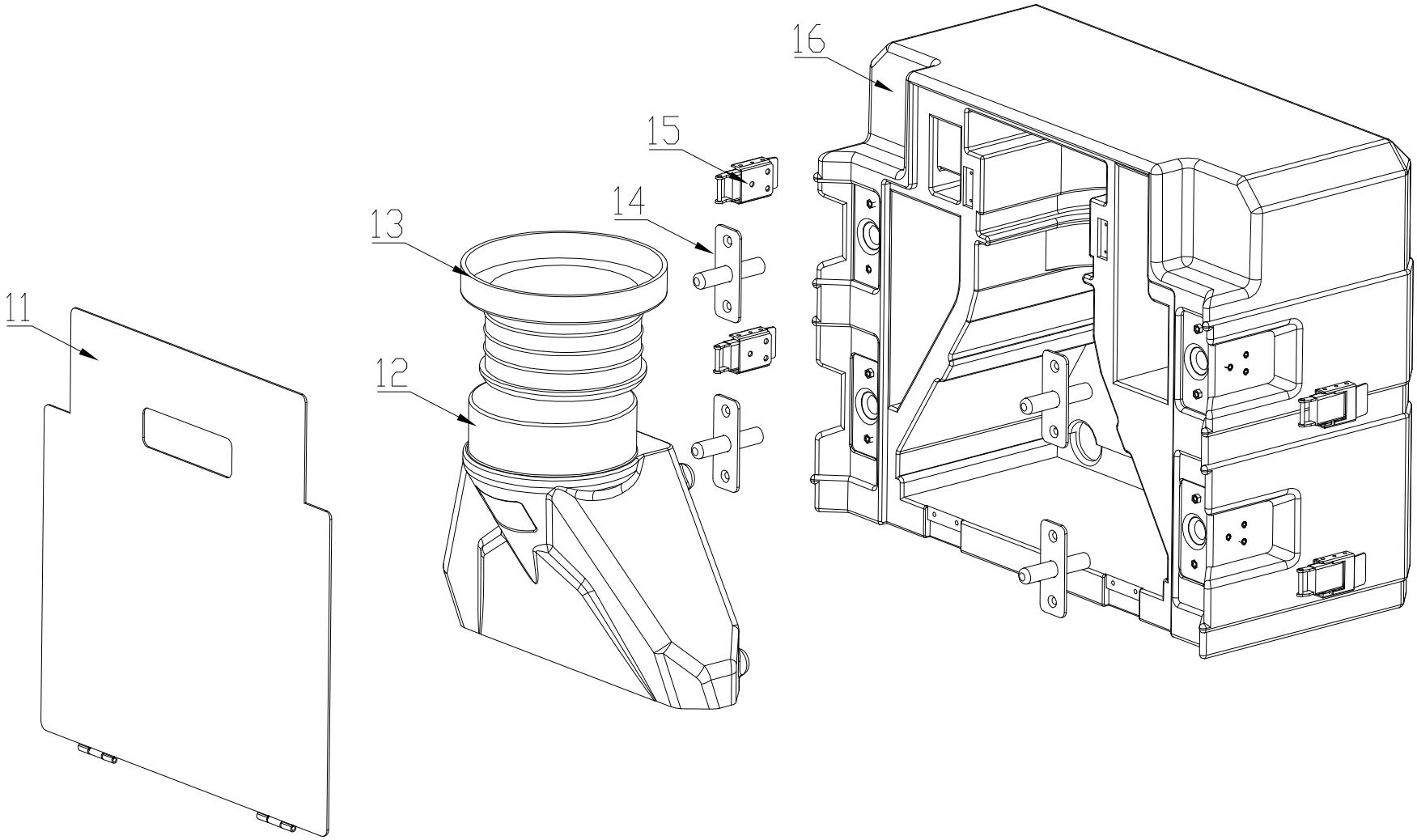
11
12
13
14
15
16

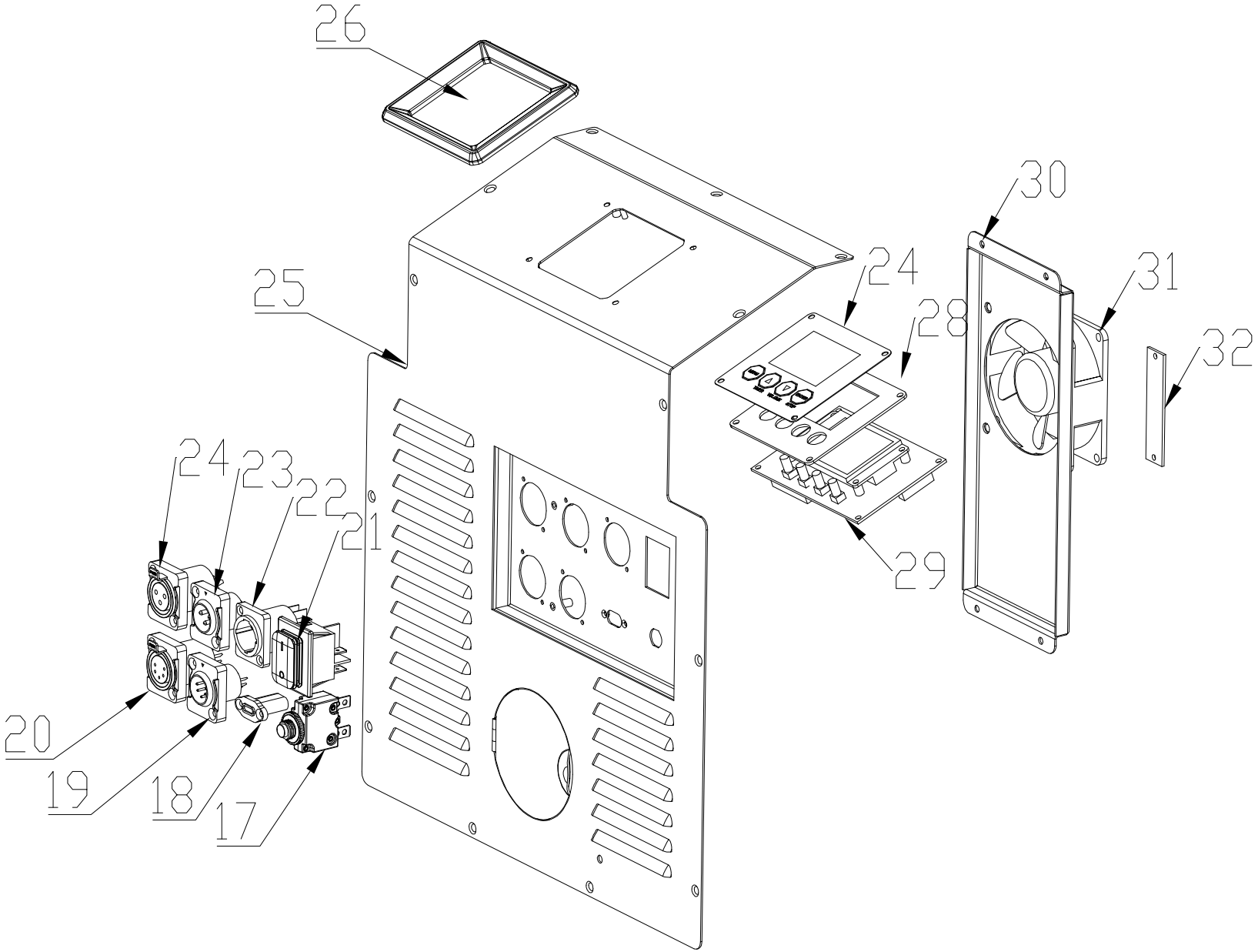
26
25
24
28
29
30
31
32
24
23
22
21
20
19
18
17

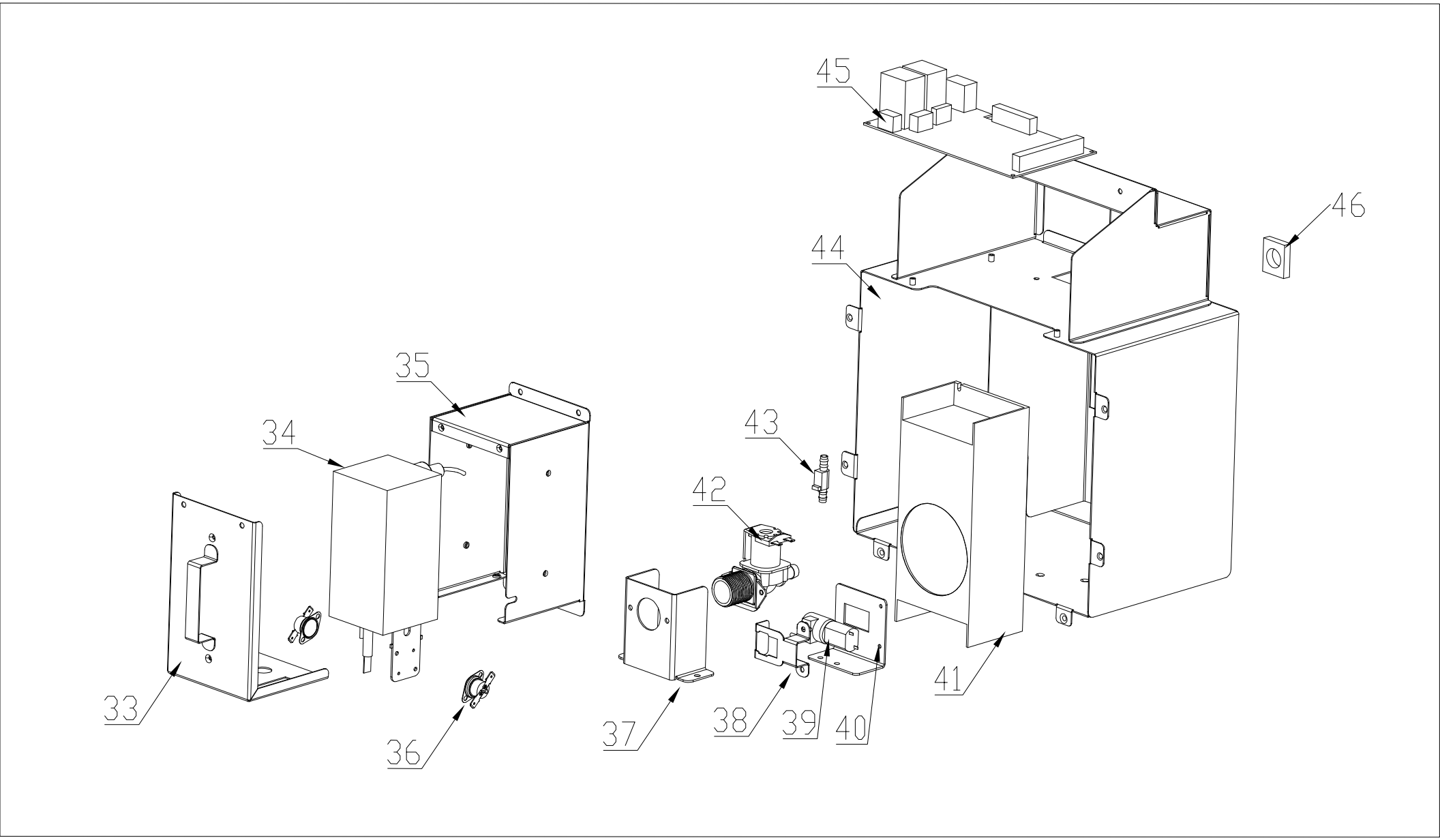
45
46
44
35
34
43
42
33
36
37
38
39
40
41

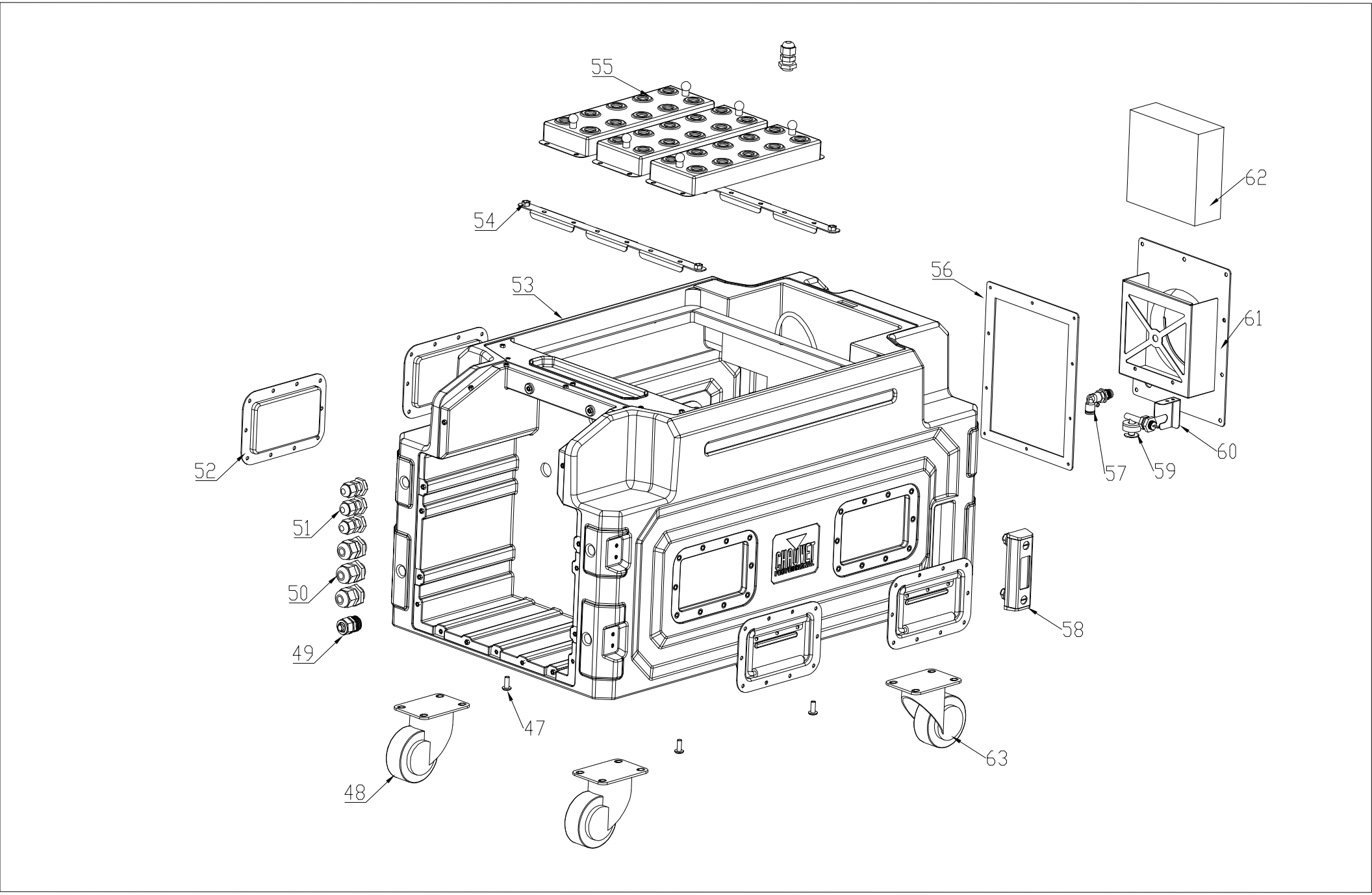
55
54
53
56
62
61
52
51
50
49
57
59
60
58
47
48
63

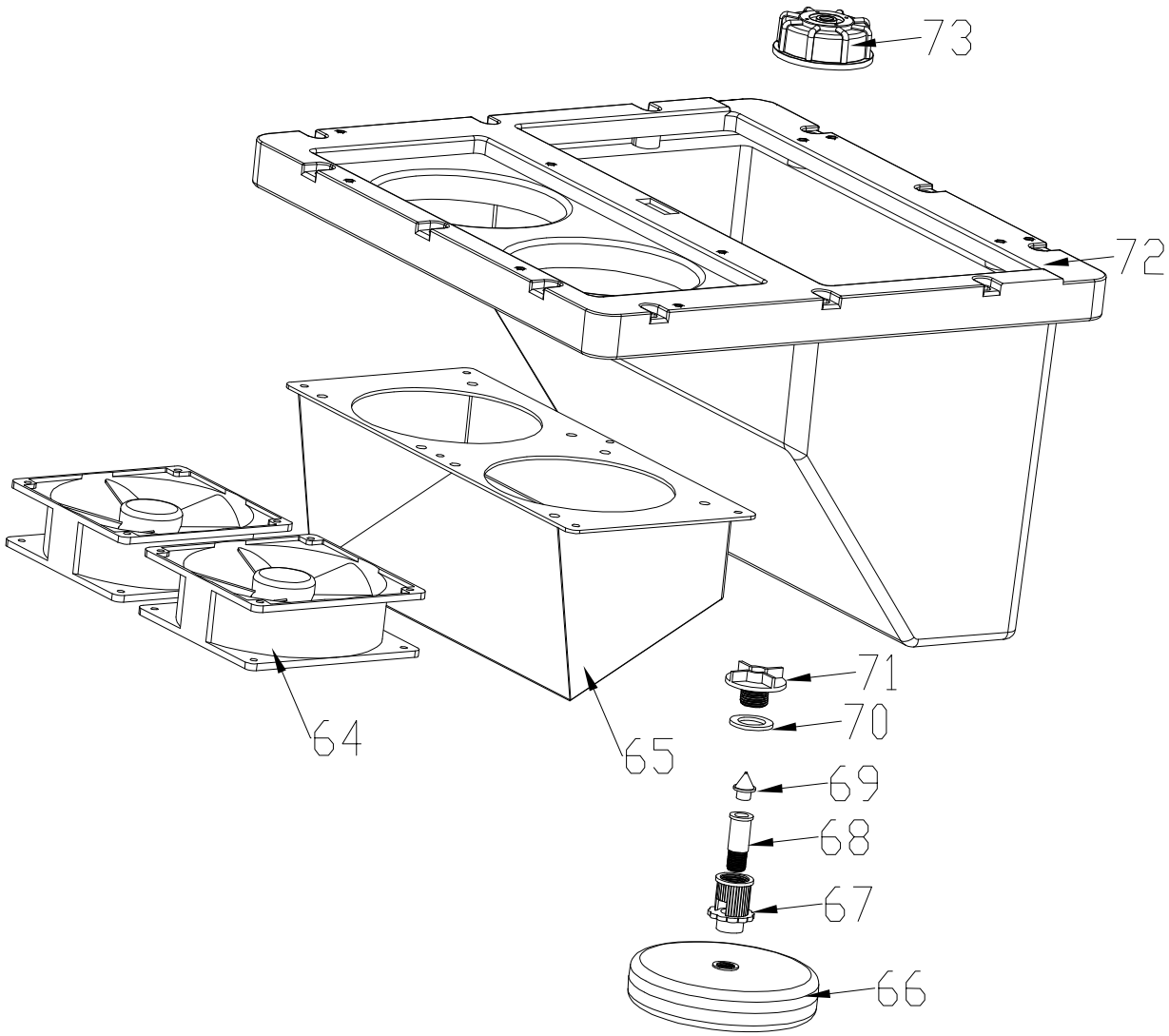
73
72
71
70
69
68
67
66
64
65

EXPLODED DIAGRAM REF STATIC	FIXTURE	PART NUMBER	DESCRIPTION
5	CLOUD9XIP	PTI104050061	fluid tank (BOM#5)
6	CLOUD9XIP	PTI104050044	fluid cover (BOM#6)
8	CLOUD9XIP	PTI101013908	Air inlet cover (BOM#8)
9	CLOUD9XIP	PTI101013909	lamina tecti (BOM#9)
10	CLOUD9XIP	PTI104020151	plastic handle (BOM#10)
11	CLOUD9XIP	PTI101014021	storage box cover plate (BOM#11)
12	CLOUD9XIP	PTI104020264	5 Inch Plastic Nozzle (BOM#12)
13	CLOUD9XIP	PTI201030539	Quick connect for hose includes foam. Should always be ordered with foam
14	CLOUD9XIP	PTI202990133	locating pin (BOM#14)
15	CLOUD9XIP	PTI117990054	hasp (BOM#15)
16	CLOUD9XIP	PTI104020545	storage box (BOM#16)
17	CLOUD9XIP	PTI106120028	Overloaded protector (BOM#17)
18	CLOUD9XIP	PTI202990121	USB cable (BOM#18)
19	CLOUD9XIP	PTI103100022	Cannon (BOM#19)
20	CLOUD9XIP	PTI103100023	Cannon (BOM#20)
21	CLOUD9XIP	PTI106090018	button switch (BOM#21)
22	CLOUD9XIP	PTI106150014	Waterproof power socket (BOM#22)
23	CLOUD9XIP	PTI103100024	Cannon (BOM#23)
24	CLOUD9XIP	PTI103100025	Cannon (BOM#24)
25	CLOUD9XIP	PTI101013905	Front panel (BOM#25)
26	CLOUD9XIP	PTI104020535	Screen decorative frame (BOM#26)
27	CLOUD9XIP	PTI110050240	Color screen flexible panel PVC (BOM#27)
28	CLOUD9XIP	PTI101013906	Screen clamp (BOM#28)
29	CLOUD9XIP	PTI203011434	Main board (BOM#29)
30	CLOUD9XIP	PTI101013919	exhaust hood (BOM#30)
31	CLOUD9XIP	PTI106050030	EC Fan (BOM#31)
32	CLOUD9XIP	PTI203042034	DMX adapter board (BOM#32)
33	CLOUD9XIP	PTI101013920	Heater top cover (BOM#33)
34	CLOUD9XIP	PTI201011024	Heater (BOM#34)
35	CLOUD9XIP	PTI101013921	Heater bottom cover (BOM#35)
36	CLOUD9XIP	PTI106130047	THERMAL SWITCH (BOM#36)
37	CLOUD9XIP	PTI101014383	Magnetic valve holder (BOM#37)
38	CLOUD9XIP	PTI101013907	Peristaltic Pumps holder 1 (BOM#38)
39	CLOUD9XIP	PTI117020105	Peristaltic Pumps (BOM#39)
40	CLOUD9XIP	PTI101013994	Peristaltic Pumps holder 2 (BOM#40)
41	CLOUD9XIP	PTI106080091	Power supply (BOM#41)
42	CLOUD9XIP	PTI106110021	Magnetic valve (BOM#42)
43	CLOUD9XIP	PTI107190045	Fluid sensors (BOM#43)
44	CLOUD9XIP	PTI101013902	Control box (BOM#44)
45	CLOUD9XIP	PTI203052021	Driver board (BOM#45)
46	CLOUD9XIP	PTI104030057	Silicone pad (BOM#46)
47	CLOUD9XIP	PTI103030400	Screw (BOM#47)
48	CLOUD9XIP	PTI118990031	Locking Wheels for Flight Case 3 Inch Swivel Caster - Gray Color (New) Blue Color (Old) 3 inch diameter size (BOM#48)
49	CLOUD9XIP	PTI103990233	Copper connector (BOM#49)
50	CLOUD9XIP	PTI104080032	CABLE JOINT (BOM#50)
51	CLOUD9XIP	PTI104080022	CABLE JOINT (BOM#51)
52	CLOUD9XIP	PTI104020424	Spring handle (BOM#52)
53	CLOUD9XIP	PTI202990081	Big box (BOM#53)
54	CLOUD9XIP	PTI101013915	Atomizer mouting (BOM#54)
55	CLOUD9XIP	PTI117030011	Ultrasound atomizer (BOM#55)
56	CLOUD9XIP	PTI118020219	Absorbent sponge (BOM#56)
57	CLOUD9XIP	PTI103090086	Connector (BOM#57)
58	CLOUD9XIP	PTI118990030	Liquid level gauge (BOM#58)
59	CLOUD9XIP	PTI106100003	FLUID SENSOR (BOM#59)
60	CLOUD9XIP	PTI101013913	FLUID SENSOR holder (BOM#60)
61	CLOUD9XIP	PTI101013912	Fog output (BOM#61)
62	CLOUD9XIP	PTI118020430	Sealing cotton for output (BOM#62)
63	CLOUD9XIP	PTI118990032	Non-Locking Wheels for Flight Case 3 Inch Swivel Caster - Gray Color (New) Blue Color (Old) 3 inch diameter size (BOM#63)
64	CLOUD9XIP	PTI106050062	DC waterproof fan (BOM#64)
65	CLOUD9XIP	PTI101013914	Air inlet plate bracket (BOM#65)
66	CLOUD9XIP	PTI104020252	Float (BOM#66)
67	CLOUD9XIP	PTI104020183	Float cup outer guide column (BOM#67)
68	CLOUD9XIP	PTI104020182	Float cup inner guide column (BOM#68)
69	CLOUD9XIP	PTI104020185	Float cup soft rubber (BOM#69)
70	CLOUD9XIP	PTI104020186	Float cup soft rubber pad (BOM#70)
71	CLOUD9XIP	PTI104020184	Float cup fixings (BOM#71)
72	CLOUD9XIP	PTI104020494	middle box (BOM#72)
73	CLOUD9XIP	PTI104020648	Fluid tank cover (BOM#73)
75	CLOUD9XIP	PTI103050031	Clamp (BOM#75)
76	CLOUD9XIP	PTI103090154	Copper plug (BOM#76)
	CLOUD9XIP	PTI103990588	Stainless Steel Barb Hose Adaptor Connector (BOM#74)